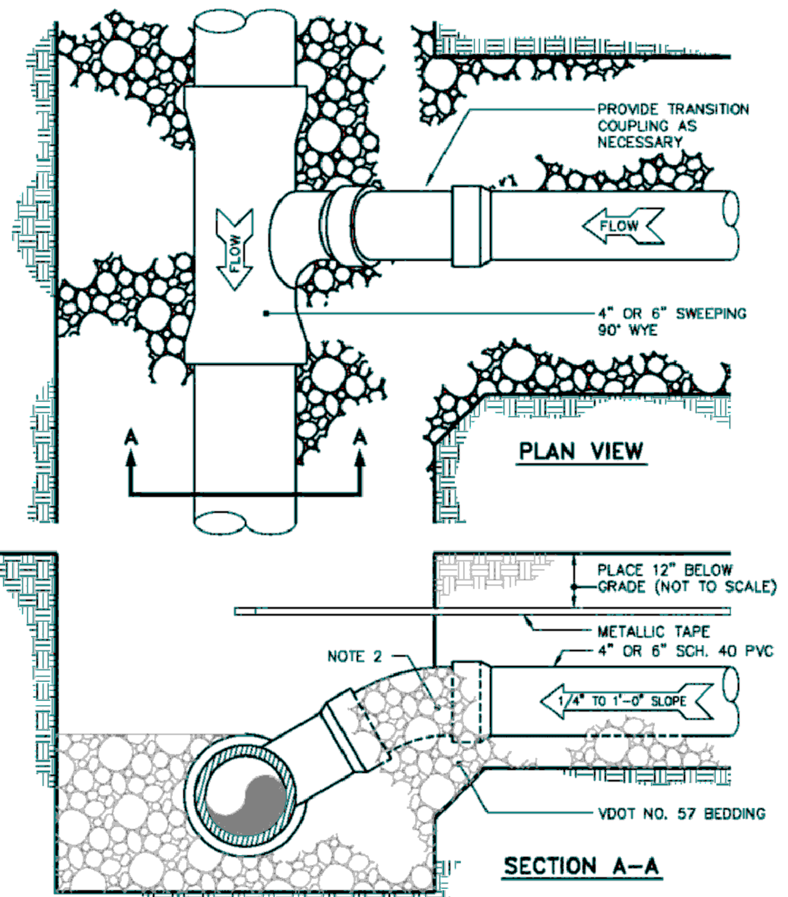

NOTES:

1. STONE SHALL BE INSTALLED TO TOP OF PIPE FOR PVC PIPE.
2. STONE SHALL BE INSTALLED TO 1/8 PIPE DIAMETER FOR DI PIPE.

DETAIL S-1 BUILDING CONNECTION – HORIZONTAL WYE
NOT TO SCALE

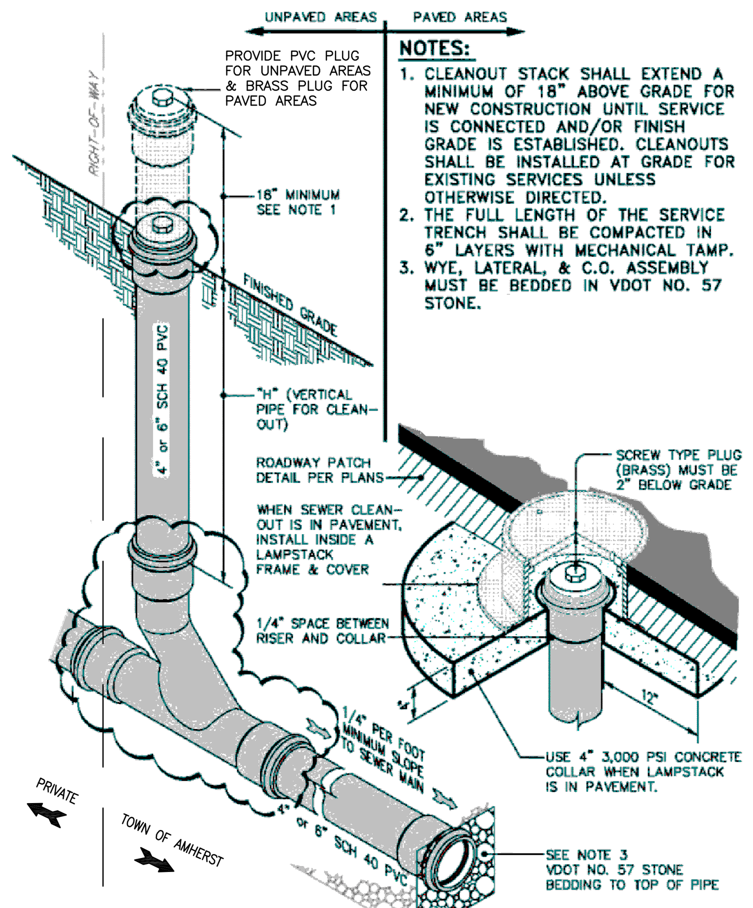

NOTES:
1. CLEANOUT STACK SHALL EXTEND A MINIMUM OF 18" ABOVE GRADE FOR NEW CONSTRUCTION UNTIL SERVICE IS CONNECTED AND/OR FINISH GRADE IS ESTABLISHED. CLEANOUTS SHALL BE INSTALLED AT GRADE FOR EXISTING SERVICES UNLESS OTHERWISE DIRECTED.
2. THE FULL LENGTH OF THE SERVICE TRENCH SHALL BE COMPACTED IN 6" LAYERS WITH MECHANICAL TAMP.
3. WYE, LATERAL, & C.O. ASSEMBLY MUST BE BEDDED IN VDOT NO. 57 STONE.

TYP. PVC SEWER LATERAL CLEAN-OUT
NOT TO SCALE

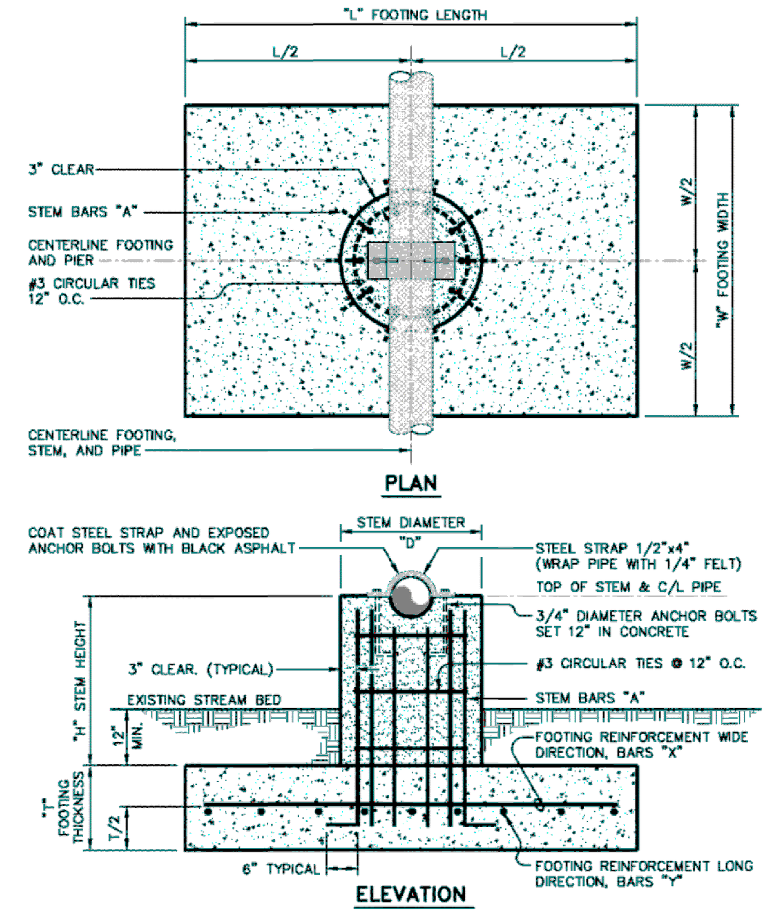

NOTES:

1. AN ALTERNATIVE DESIGN MAY BE SUBMITTED FOR REVIEW BY THE TOWN MANAGER.

DETAIL S-2 PIPE SUPPORT PIER FOR WATER CROSSING
NOT TO SCALE

ISOMETRIC

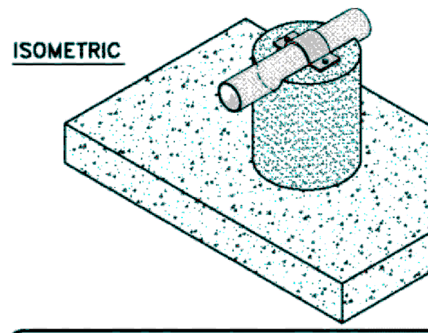

PIPE SUPPORT PIER FOR WATER CROSSING

PIPE DIAMETER	STEM DIAMETER "D"	STEM HEIGHT "H"	STEM REINF. BARS "A"	FOOTING SIZE "L"	FOOTING SIZE "T"	FOOTING SIZE "W"	FOOTING REINF. BARS "X" (L)	FOOTING REINF. BARS "Y" (W)	STEM CONC. VOL. / VERT. FT. CU. YARDS	STEM STEEL WT./ VERT. FT. LBS.	FOOTING CONC. VOL. CU. YARDS	FOOTING STEEL WT./ VERT. FT. LBS.
8" TO 10"	2'-6"	1'-3"	10#4	8'-0"	2'-0"	5'-6'	6#5	9#4	0.18	9.04	3.26	77.0
		4'-6'	10#5	10'-0"	2'-6"	5'-0"	6#5	11#4		12.79	4.63	92.5
		7'-9'	10#5	11'-0"	2'-8"	6'-0"	7#6	12#5		12.79	6.52	179.2
		10'-12'	10#6	12'-0"	3'-0"	7'-0"	8#6	13#5		17.38	9.33	226.3
12" TO 16"	3'-0"	1'-3'	10#4	10'-0"	2'-6"	5'-0"	6#5	11#4	0.26	9.63	4.63	92.5
		4'-6'	10#5	12'-0"	2'-8"	5'-0"	6#6	13#5		13.38	5.92	164.6
		7'-9'	10#6	13'-0"	3'-0"	6'-0"	7#7	14#5		17.97	8.67	259.2
		10'-12'	10#8	14'-0"	3'-0"	6'-0"	7#8	15#6		26.65	9.33	376.2
18" TO 20"	3'-6"	1'-3'	14#5	11'-0"	2'-6"	5'-0"	6#5	12#5	0.36	18.14	5.09	122.0
		4'-6'	14#6	12'-0"	3'-0"	6'-0"	7#6	13#5		24.57	8.00	195.5
		7'-9'	14#6	14'-0"	3'-0"	6'-0"	7#7	15#6		24.57	9.33	317.1
		10'-12'	14#8	15'-0"	3'-6"	6'-0"	7#8	16#6		40.92	11.67	403.2
24"	3'-6"	1'-3'	14#5	11'-0"	2'-6"	6'-0"	7#5	12#5	0.36	18.14	8.11	145.5
		4'-6'	14#6	13'-0"	3'-0"	6'-0"	7#6	14#6		24.57	8.67	247.1
		7'-9'	14#6	14'-0"	3'-4"	7'-0"	8#7	15#6		24.57	12.10	367.2
		10'-12'	14#8	15'-0"	4'-0"	7'-0"	8#8	16#6		40.92	15.56	465.9

NOTES:

1. MINIMUM SOIL BEARING CAPACITY REQUIRED = 3,000 PSF. ENGINEER SHALL INSPECT ALL FOOTING PRIOR TO PLACEMENT OF CONCRETE.
2. CONCRETE – 3,000 PSI @ 28 DAYS.
3. REINFORCING – ASTM A615, GRADE 60.
4. FOOTING IS PLACED SO THAT LONG SIDE IS PARALLEL TO DIRECTION OF STREAM FLOW OF FLOOD STAGE.
5. IF FOOTING IS PLACED DIRECTLY ON SOLID ROCK, 1"ø DOWELS TO BE PLACED IN ROCK TO CONNECT FOOTING TO ROCK AND PREVENT SLIDING. DOWELS TO BE PLACED ON 2'-0" CENTERS IN EACH DIRECTION.
6. SUPPORT SIZE BASED ON 15 FPS STREAM FLOW WITH EMPTY (BUOYANT) PIPE.
7. FOR VELOCITIES > 15 FPS, PIERS SAHLL BE DESIGNED BY LICENSED PROFESSIONAL ENGINEER.

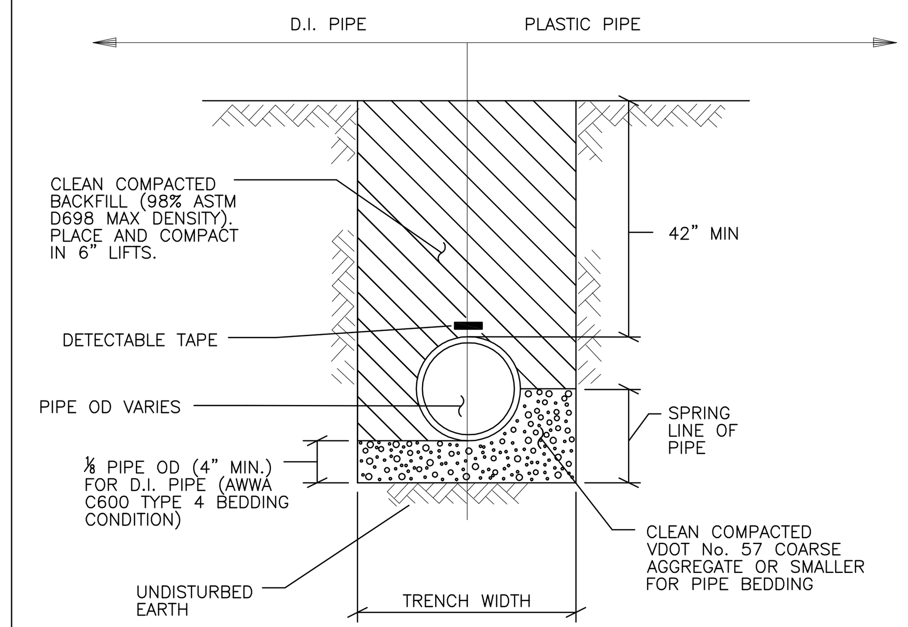

NOTES:

1. VDOT No. 1 OR No. 2 FOUNDATION STONE SHALL BE REQUIRED WHEN SOIL CONDITIONS ARE UNSUITABLE FOR BEARING NEW STRUCTURES OR PIPING.
2. AN ADDITIONAL 1" DEPTH OF BEDDING MATERIAL WILL BE REQUIRED FOR EACH ADDITIONAL 2 FEET OF TRENCH DEPTH IN EXCESS OF 16 FEET UP TO A MAX. OF 12 INCHES.

DETAIL S-3 SANITARY SEWER LINE TRENCH DETAIL
NOT TO SCALE

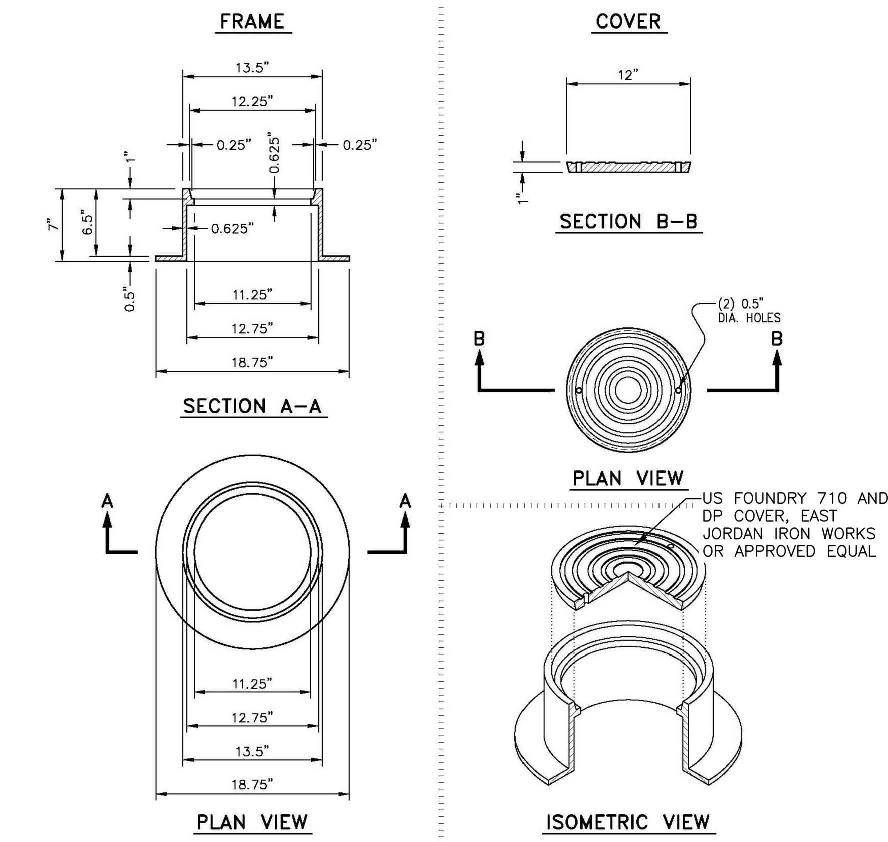

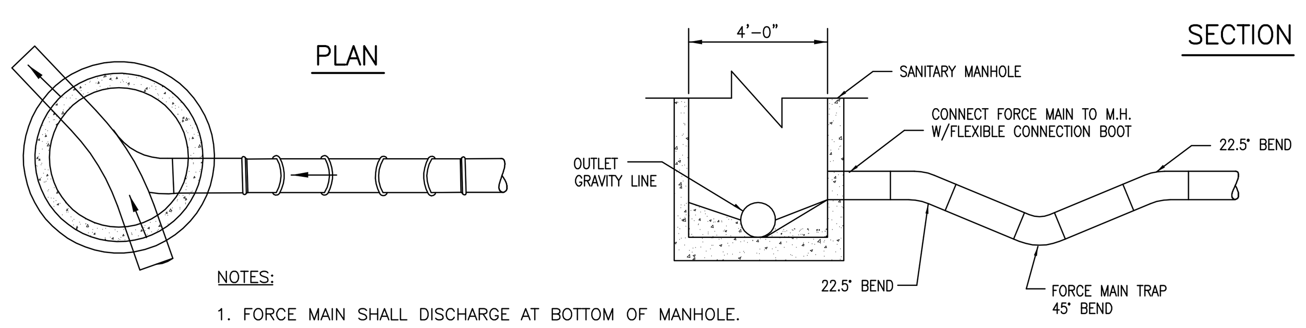

NOTES:

1. FORCE MAIN SHALL DISCHARGE AT BOTTOM OF MANHOLE.

DETAIL S-4 TYPICAL FORCE MAIN MANHOLE CONNECTION
NOT TO SCALE

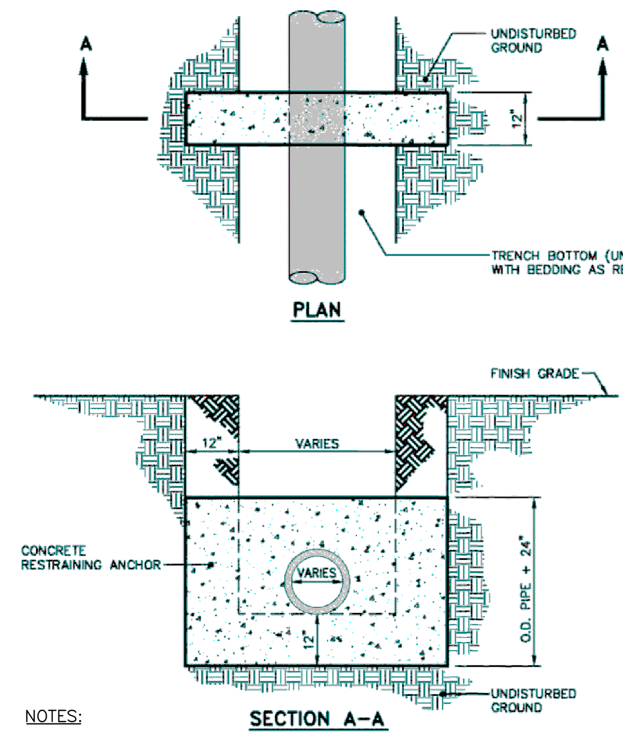

NOTES:

1. SPACING FOR CONCRETE RESTRAINING ANCHORS SHAL BE AS SHOWN ON THE PLANS.
2. THE PORTION OF THE ANCHOR IN UNDISTURBED GROUND SHALL BE POURED UNFORMED.
3. CONCRETE SHALL BE 3,000 PSI.
4. CONCRETE ANCHOR TO BE POURED AROUND BELL OF PIPE WHERE APPLICABLE.
5. USE ON SLOPES EQUAL TO OR GREATER THAN 20%.
6. PIPE SHALL BE DUCTILE IRON PIPE.

DETAIL S-5 CONCRETE RESTRAINING ANCHOR
NOT TO SCALE

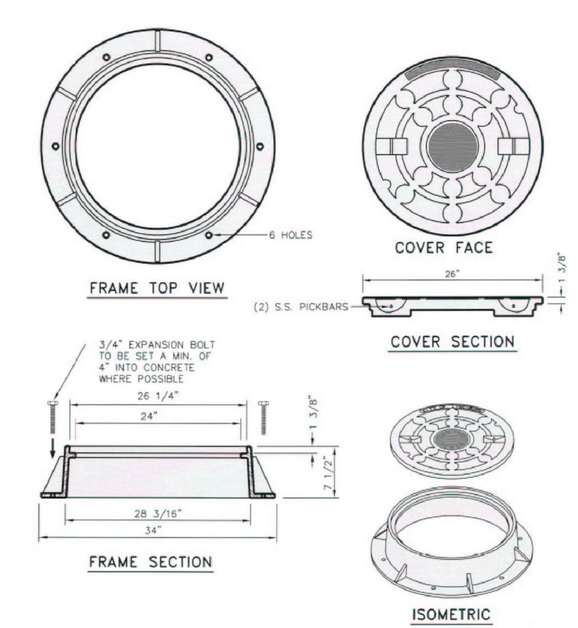

1. SEE ITEM 2.10.2 ON DWG. DET-S2 FOR APPROVED MANUFACTURERS.
2. MANHOLE FRAMES AND COVERS SHALL BE ROADWAY TYPE DEEP SOCKET COVERS. MACHINE FRAMES AND COVERS TO PREVENT RATTLING. CASTINGS SHALL BE GRAY IRON MEETING REQUIREMENTS OF ASTM A48, CLASS 30.

DETAIL S-6 STANDARD MANHOLE FRAME & COVER
NOT TO SCALE

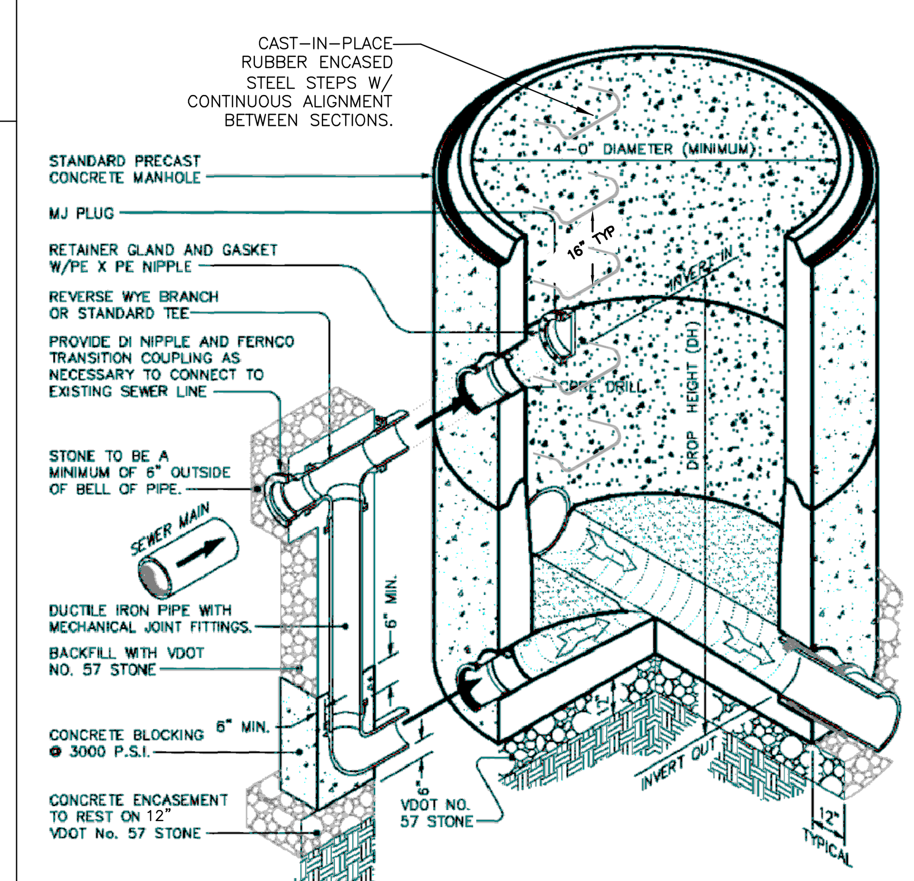

DETAIL S-7 STANDARD EXTERIOR DROP MANHOLE
NOT TO SCALE

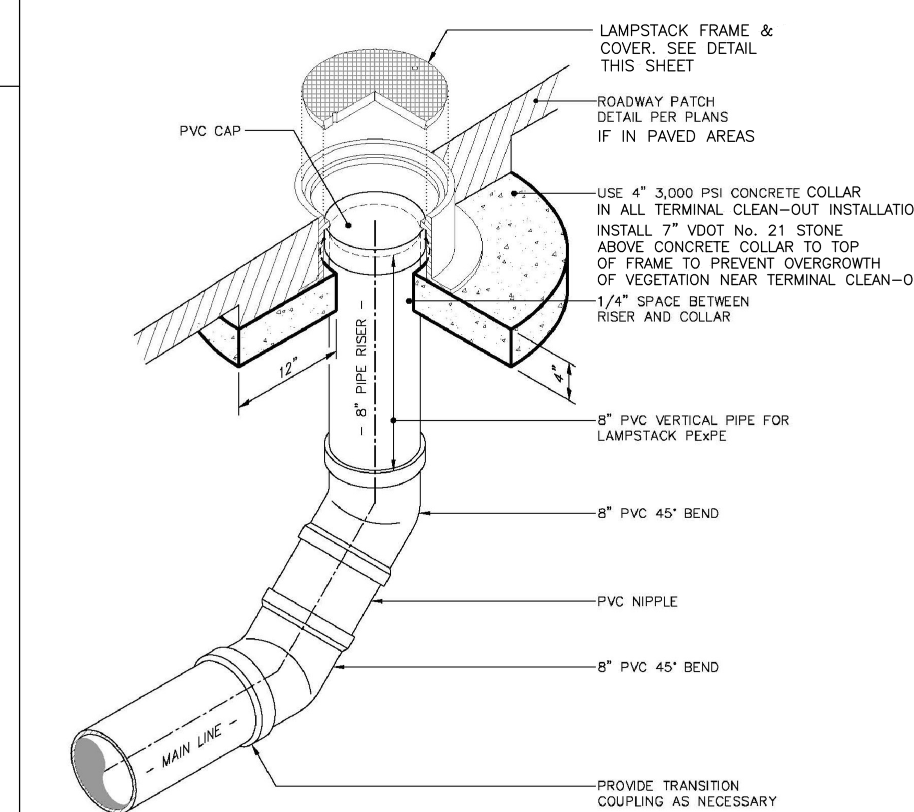

NOTES:

1. TERMINAL CLEAN-OUTS MAY ONLY BE USED IN SITUATIONS WHERE: NO MORE THAN 5 RESIDENTIAL CUSTOMERS BETWEEN A TERMINAL CLEAN-OUT AND THE FIRST DOWNSTREAM MANHOLE.
2. THERE IS NO REASONABLE EXPECTATION THAT THE LINE MAY BE EXTENDED.
3. THE NEXT DOWNSTREAM MANHOLE IS NOT BE MORE THAN 250 FEET DOWNSTREAM.
4. LAMPSTACK FRAMES AND COVERS SHALL BE MANUFACTURED FROM CLASS 30 GREY IRON MEETING THE REQUIREMENTS OF ASTM A48.
5. LAMPSTACK FRAMES AND COVERS SHALL BE BITUMINOUS COATED.

DETAIL S-11 TERMINAL SEWER CLEAN-OUT
(STANDARD LAMPSTACK WITH FRAME AND COVER)
NOT TO SCALE

NOTES:

1. ALL SERVICE LATERALS INTO MANHOLE TO BE CORE DRILLED AND BOOTED.
2. MAXIMUM DEPTH 4' DIAMETER MANHOLE = 20'
3. THE INVERT SHAPING AS SHOWN SHALL CONSIST OF 3,000 PSI CONCRETE TROWELLED TO A SMOOTH SURFACE WITH NO AGGREGATE EXPOSED.
4. DETAILS OF INVERT SHAPING AS SHOWN HEREON ARE FOR EXAMPLE PURPOSES ONLY. EACH MANHOLE IS TO BE SHAPED INDIVIDUALLY TO BEST FIT THE PARTICULAR INLET AND OUTLET CONFIGURATION AND FLOW LINES.
5. WHEN DIFFERENT DIAMETER PIPES ARE USED FORM INVERT IN TO INVERT OUR, PROVIDE A SMOOTH TRANSITION THROUGH THE INVERT.

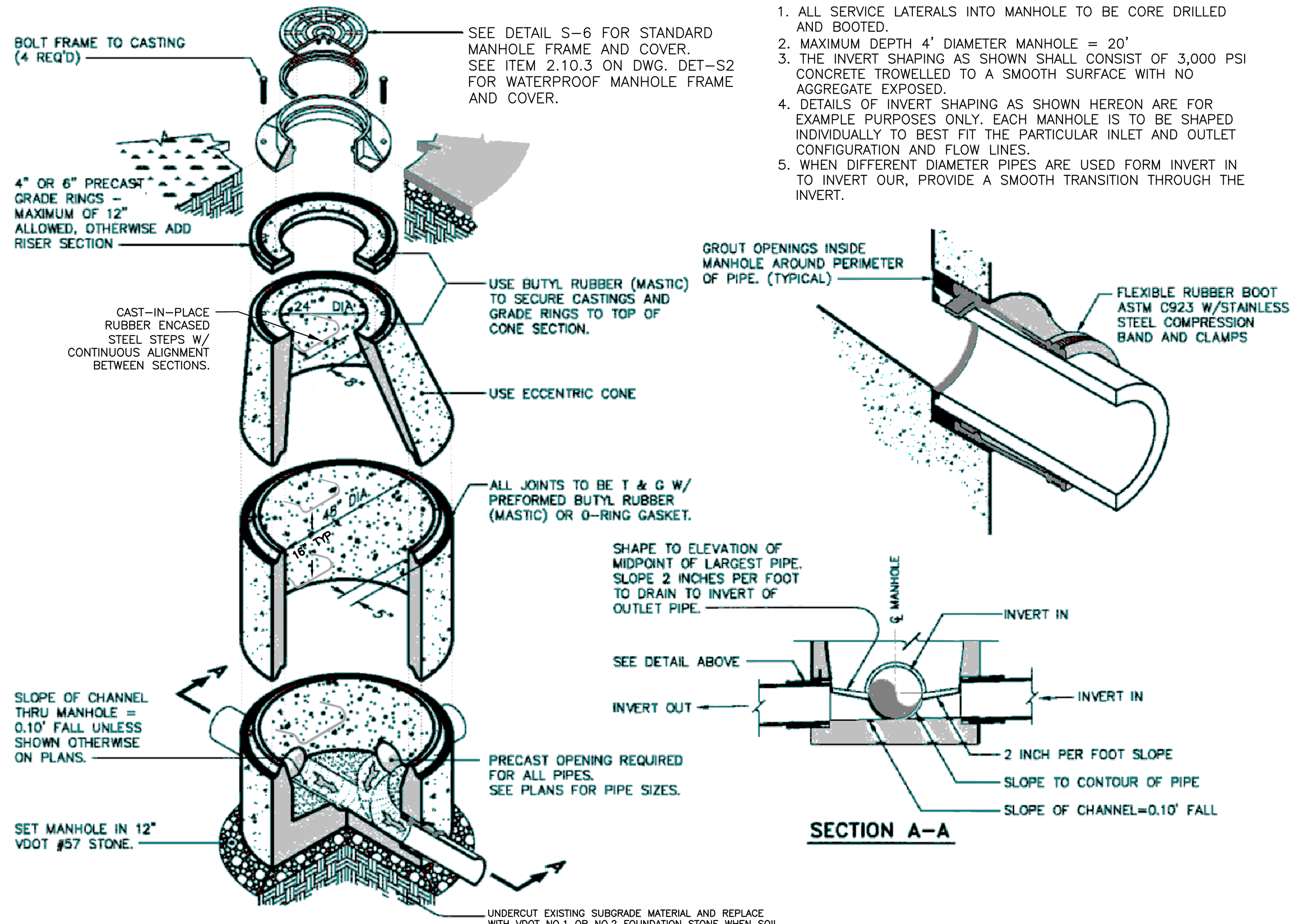

DETAIL S-8 PRECAST CONCRETE 4' DIAMETER MANHOLE
NOT TO SCALE

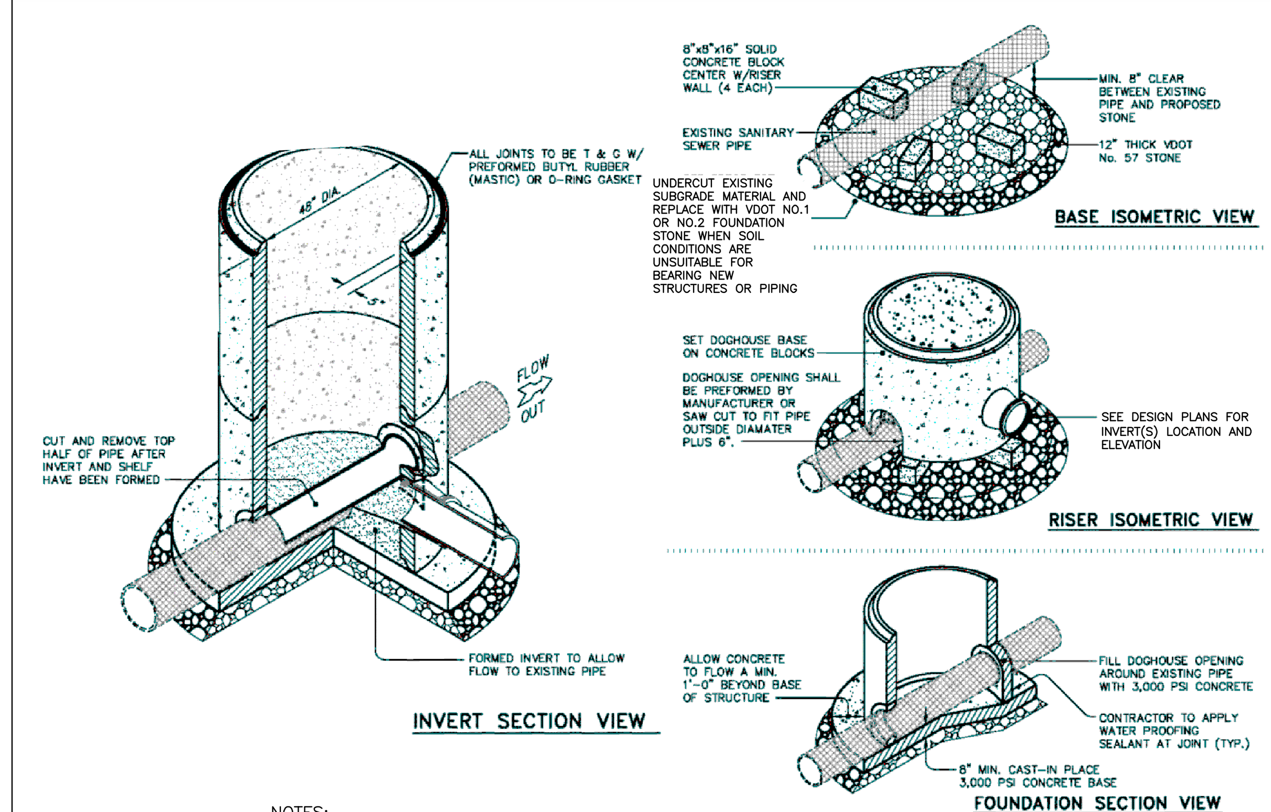

NOTES:

1. ALL SERVICE LATERALS INTO MANHOLE TO BE CORE DRILLED AND BOOTED.
2. MAXIMUM DEPTH 4' DIA. MANHOLE = 20'.
3 PROVIDE M.H. STEPS AS SHOWN IN DETAIL S-8.

DETAIL S-9 PRECAST CONCRETE DOGHOUSE MANHOLE
NOT TO SCALE

NOTES:

1. LOCATE VENT PIPE AS SHOWN OR AS DIRECTED BY TOWN OF AMHERST.
2. CONNECT 4" STEEL VENT PIPE TO MANHOLE FLEXIBLE BOOT.
3 PROVIDE M.H. STEPS AS SHOWN IN DETAIL S-8

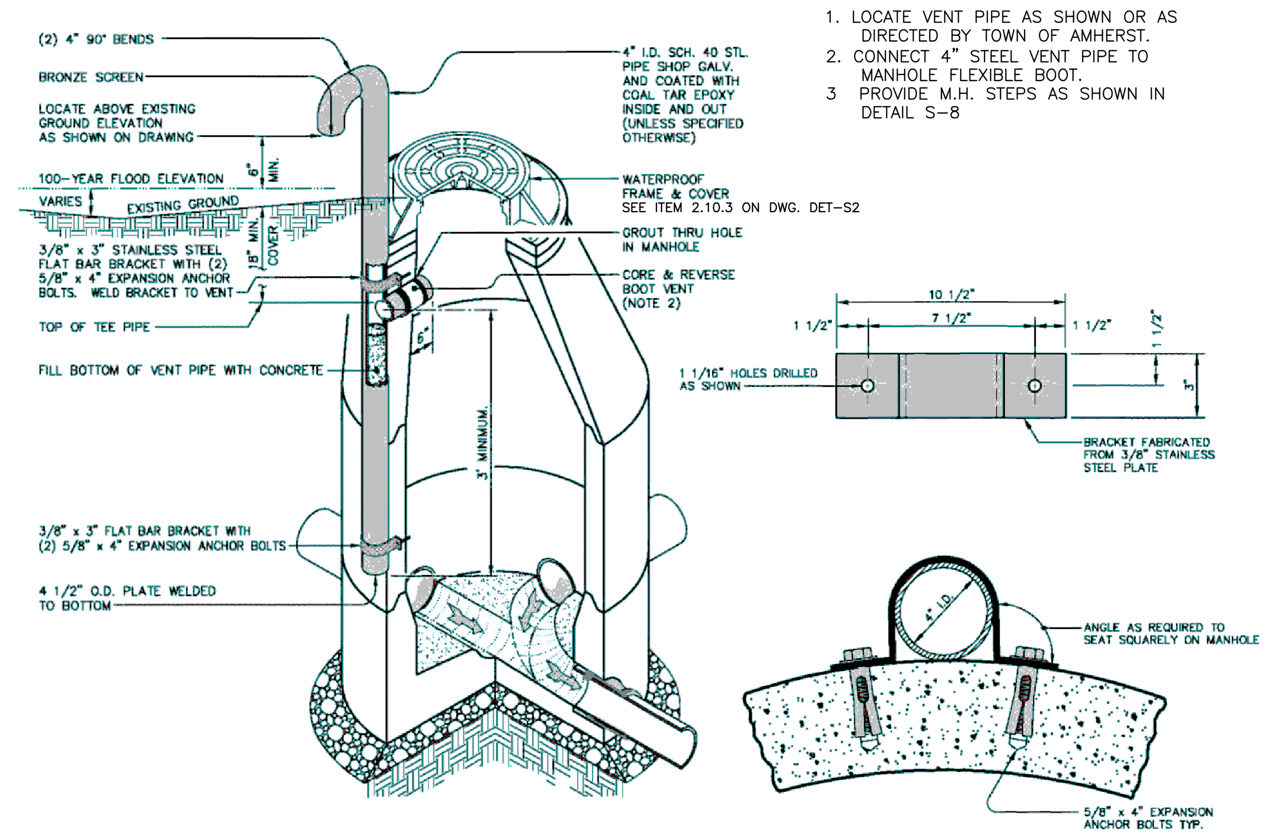

DETAIL S-10 WATERTIGHT MANHOLE VENTING PIPE
NOT TO SCALE

GENERAL NOTES:

1. ALL MATERIALS SHALL BE NEW, BEST QUALITY AND IN ACCORDANCE WITH APPROPRIATE AWWA SPECIFICATIONS.
2. ALL VALVES SHALL BE MJ RW TYPE UNLESS OTHERWISE SPECIFIED.
3. THE DEVELOPER/OWNER SHALL INCLUDE THE FOLLOWING MASTER NOTES ON THE MAIN SITE PLAN SUBMITTED TO THE TOWN FOR REVIEW.
   A. THE TOWN OF AMHERST ADMINISTERS BUSINESS LICENSE AND ZONING ORDINANCE PROGRAMS (434-946-7885). AMHERST COUNTY ADMINISTERS LAND DISTURBANCE(EROSION AND SEDIMENT CONTROL) AND BUILDING CODE PROGRAMS (434-946-9302). PERMITS FOR WORK IN THE PUBLIC STREET RIGHT OF WAY ARE ADMINISTERED BY VDOT (434-946-7631).
   B. ALL WATER AND SEWER IMPROVEMENTS PROJECTS, WHETHER IN CONNECTION WITH A SUBDIVISION, A COMMERCIAL DEVELOPMENT (I.E., SITE PLANS) OR TOA-FUNDED MAINTENANCE WORK AND CAPITAL PROJECTS, SHALL BE CONSTRUCTED ACCORDING TO TOWN OF AMHERST SPECIFICATIONS.
   C. ALL MATERIALS SHALL BE APPROVED BY THE TOWN MANAGER OR HIS AUTHORIZED REPRESENTATIVE BEFORE INSTALLATION.
   D. THE TOWN SHALL PROVIDE AND SET WATER METERS. DEVELOPER SHALL FURNISH AND INSTALL ALL OTHER MATERIALS, INCLUDING METER BOXES, METER YOKES, FIRE HYDRANTS, MANHOLES, AND CLEAN-OUTS ACCORDING TO TOWN OF AMHERST SPECIFICATIONS.
   E. THE CONTRACTOR SHALL MAINTAIN A SET OF APPROVED PLANS ON THE JOB SITE AT ALL TIMES DURING THE CONSTRUCTION.
   F. CALL MISS UTILITY AT 811 BEFORE DIGGING TO HAVE UNDERGROUND UTILITIES MARKED.
4. ALL APPROVED PLANS SHALL BE SIGNED BY DEVELOPER/OWNER AND TOWN MANAGER PRIOR TO APPROVAL AND CONSTRUCTION.
5. ALL TESTING SHALL BE PAID FOR BY THE DEVELOPER, WITNESSED BY THE TOWN OF AMHERST AT ITS DISCRETION AND CERTIFIED BY A LICENSED PROFESSIONAL ENGINEER.
6. THE CONTRACTOR SHALL RESTORE THE DISTURBED AREAS (I.E., BACKFILL, COMPACT, FERTILIZE/SEED/STRAW AND PATCH PAVEMENT) TO ORIGINAL CONDITION OR BETTER.
7. AS-BUILT DRAWINGS CERTIFIED BY A LICENSED PROFESSIONAL ENGINEER SHALL BE PROVIDED TO THE TOWN PRIOR TO RELEASE OF ANY SURETY BOND.

NO.	REVISION	BY	DATE
1	ADDED DETAIL S-11	JAC	5/24/07
2	REVISED MISCELLANOUS NOTES	HFW	6/14/07

WW ENGINEERS SURVEYORS PLANNERS ASSOCIATES
P.O. BOX 4119 Lynchburg, VA 24502 Phone: 434.316.6080
1402 Greenbrier Place Charlottesville, VA 22901 Phone: 434.984.2700
www.wwassociates.net

DESIGNED BY: FAW
DRAWN BY: FAW/SWB
REVIEWED BY: HFW
WWA NUMBER: 204232.00
PROJECT: STANDARD DETAILS TOWN OF AMHERST, VIRGINIA
TITLE: SANITARY SEWER DETAILS
FILE NAME: M:\204232.00\DET-S1.DWG
DISCIPLINE: CIVIL
SCALE: H: N.T.S. V:
DATE: 4/20/06
REVISION NUMBER: 2
DRAWING NUMBER: DET-S1
SHEET NUMBER: 1 OF 4

DESIGNED BY:
DRAWN BY:
REVIEWED BY:
PROJ. NUMBER:
PROJECT:
TITLE:
FILE NAME:
DISCIPLINE:
SCALE: H: V:
DATE:
REVISION NUMBER:
DRAWING NUMBER:
SHEET NUMBER: